Parallel

Deck-Mount Bath Faucet with Handshower

K-23488T-4-CP

Description

The Parallel collection by Kohler blends the opposing elements of flat surfaces and sharp angles into a harmonious balance. The faceted forms that result from this interplay of geometry set the collection apart. Discover the many facets of contemporary design with this versatile collection.

Model	**K-23488T-4-CP**
Finish	Polished Chrome (CP), French Gold (AF), Matte Black (BL)
Number of Outlets	G 1/2"
Installation type	Deck Mount
Dimensions	Height of handshower: 240 mm
	Handshower 8.5 LPM at 4.1 bars
Features	- Solid Metal Construction for Durability and Reliability - KOHLER ceramic disc valves exceed industry standards for a durable performance - KOHLER finishes resist corrosion and tarnishing, exceeding industry standards

Technical drawing

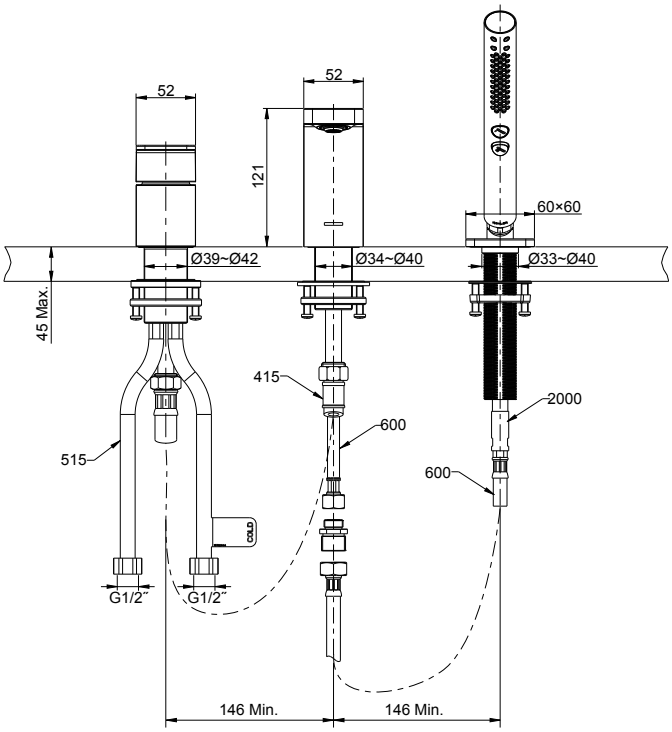

Kohler Co. reserves the right to make revisions without notice to product specifications.
For more information, please refer www.me.kohler.com or mail at contact.middleeast@kohler.com

KOHLER