SERVICEABLE PARTS

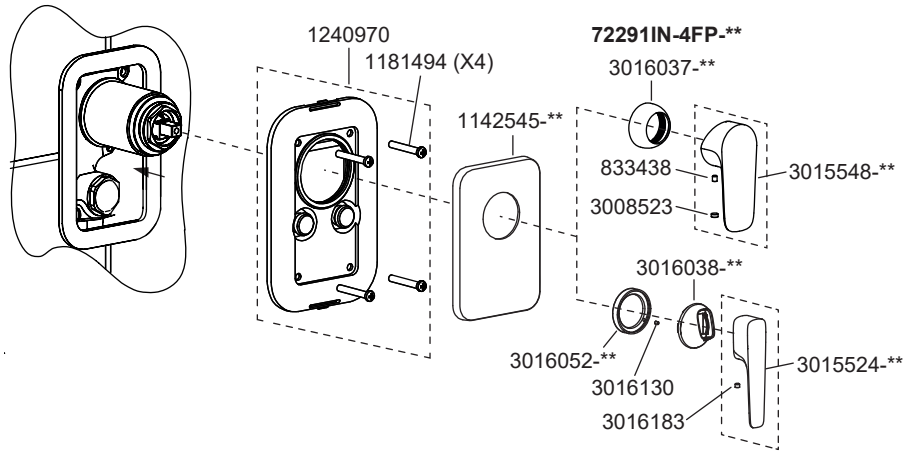

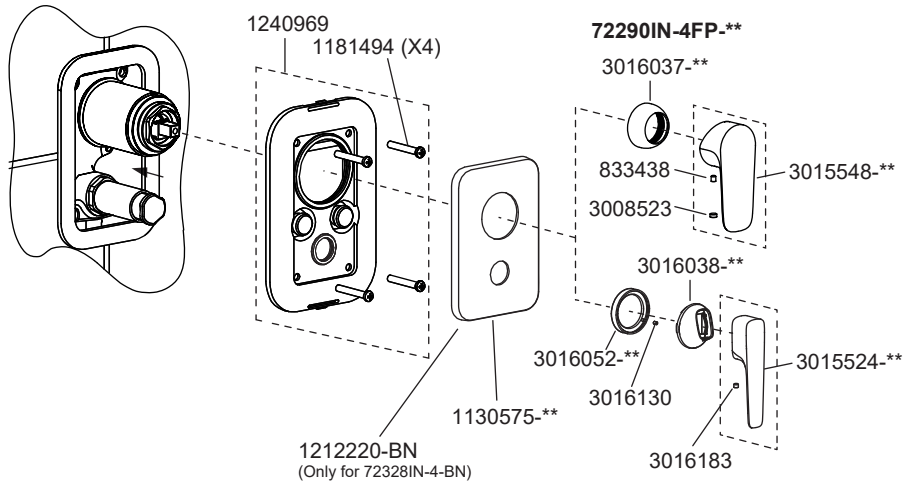

**-Color code must be specified when ordering.

THE BOLD LOOK OF KOHLER®

Kohler India Corporation Pvt. Ltd.
6th Floor, Office Tower, Ambience Island,
NH-8, Gurgaon-122001, Haryana, INDIA.
Customer Care : 1800 103 2244 (Toll Free) &
+91-124-4319685 / 86
Email : indiacustomercare@kohler.com
Website: www.kohler.co.in

All information is based on the latest product information available at the time of publication. Kohler Co. reserves the right to make changes in product characteristics, packaging or availability at any time without notice.

KOHLER®

ALEO & ALEO+

INSTALLATION INSTRUCTIONS

SHOWER TRIM

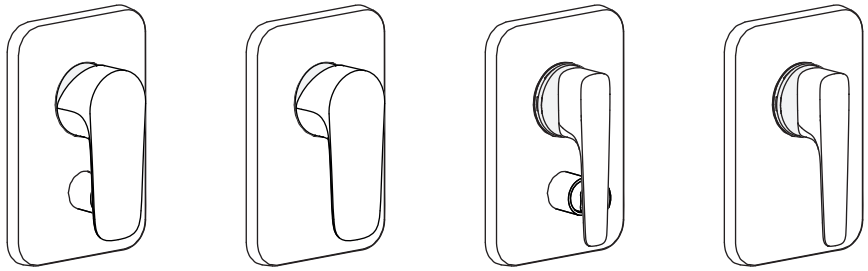

72290IN-4FP-**	72291IN-4FP-**	72328IN-4/4FP-**	72329IN-4FP-**
Aleo Recessed Bath & Shower Trim	Aleo Recessed Shower Only Trim	Aleo+ Recessed Bath & Shower Trim	Aleo+ Recessed Shower Only Trim

ROUGH-IN DIMENSIONS

72290IN-4FP-/ 72291IN-4FP-****

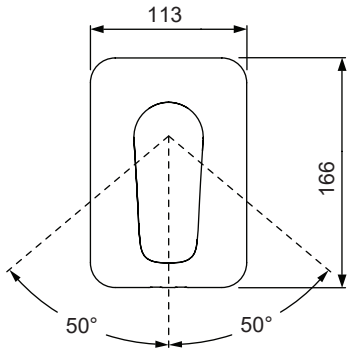

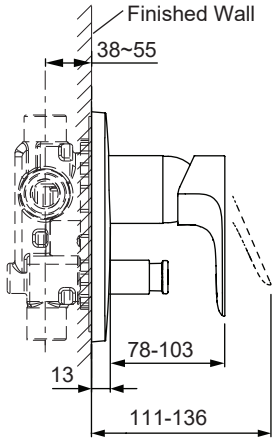

*All dimensions in mm
(only for reference)

72328IN-4/4FP-**/ 72329IN-4FP-**

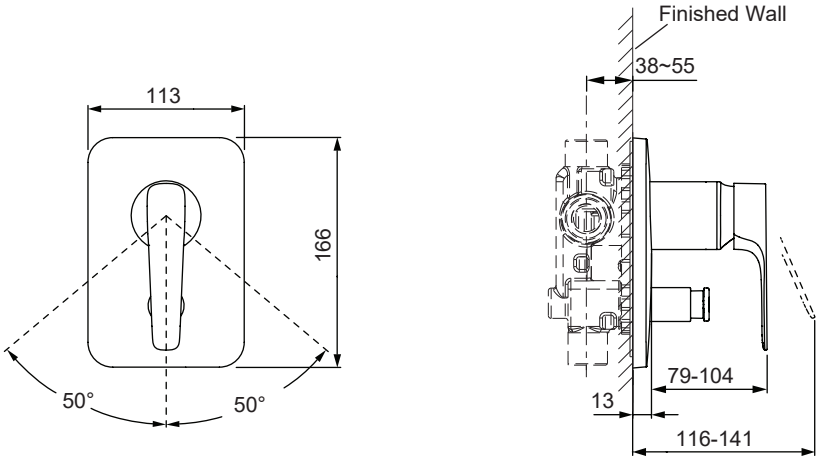

TOOLS REQUIRED

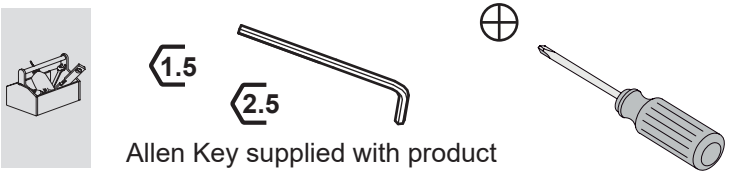

Allen Key supplied with product

INSTALLATION

1

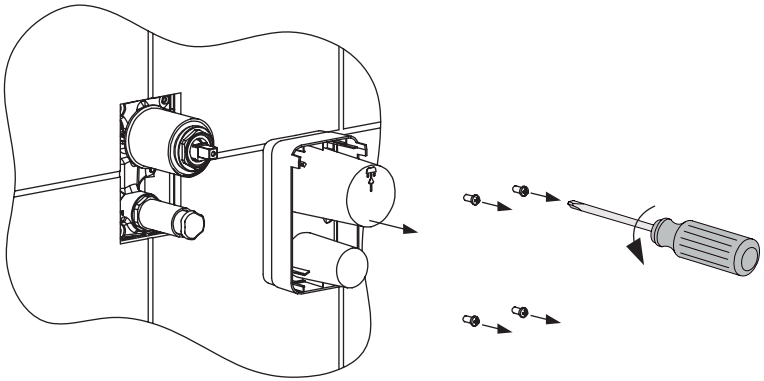

2

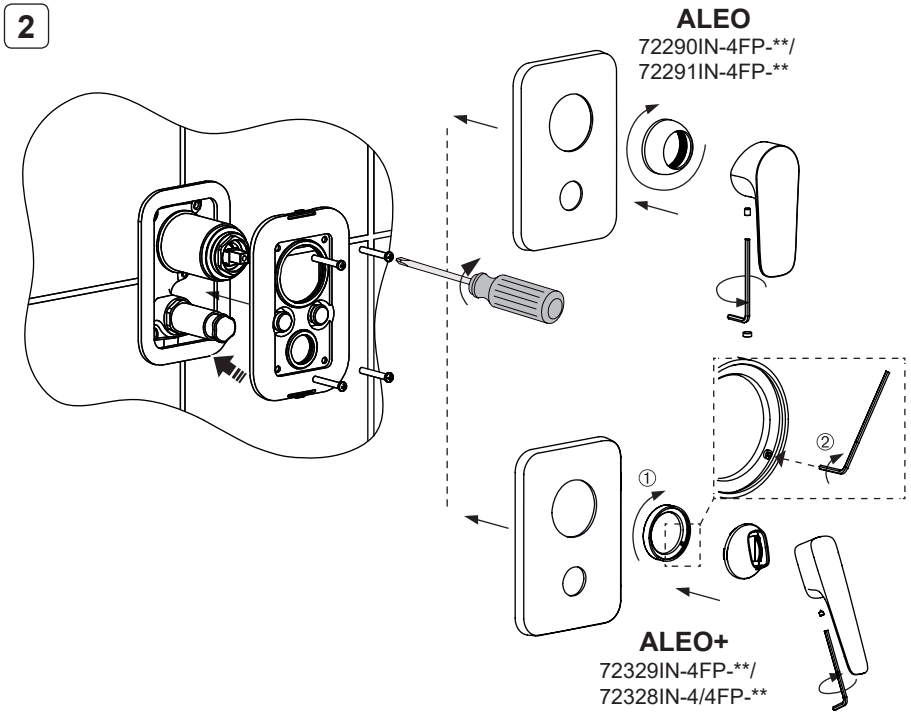

1. SHOWN SKU'S (RECESS BATH & SHOWER) ARE FOR REFERENCE ONLY

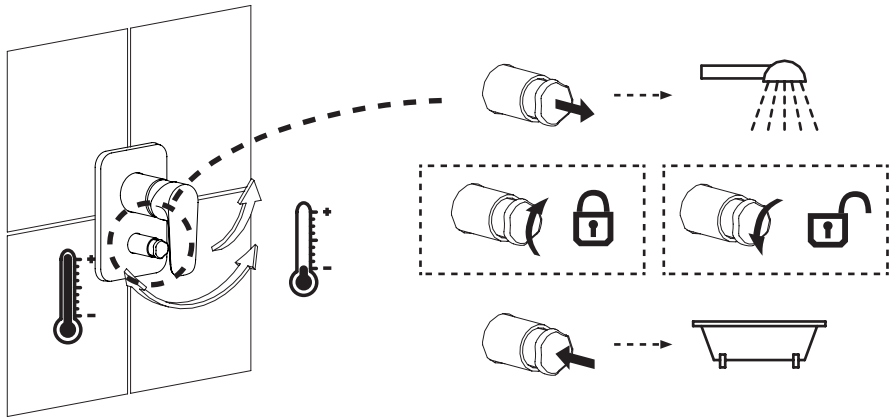
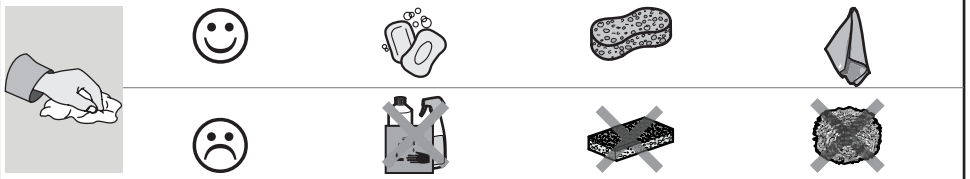
CLEANING INSTRUCTIONS