## Aleo

Deck-Mount Bath Faucet with Handshower and Diverter

**K-72292T-4E2-CP**

### Description

Transform your bathroom into the ultimate private retreat with essential simplicity and beauty of Aleo faucets collections. A carefully considered flat surface handle creates contemporary lines.

| | |
|---|---|
| **Model** | **K-72292T-4E2-CP** |
| **Finish** | Polished Chrome (CP), Matte Black (BL) |
| **Connection Type** | G 1/2" |
| **Installation type** | Deck-or Counter-Mount |
| **Dimensions** | Reach 160 mm, Height 150 mm |
| **Flow rate** | Hand-shower 8.5 LPM at 4.1 bars |
| **Features** | - Solid Metal Construction for Durability and Reliability<br>- KOHLER ceramic disc valves exceed industry longevity standards by two times for a lifetime of durable performance<br>- KOHLER finishes resist corrosion and tarnishing, exceeding industry durability standards over two times |

### Technical drawing

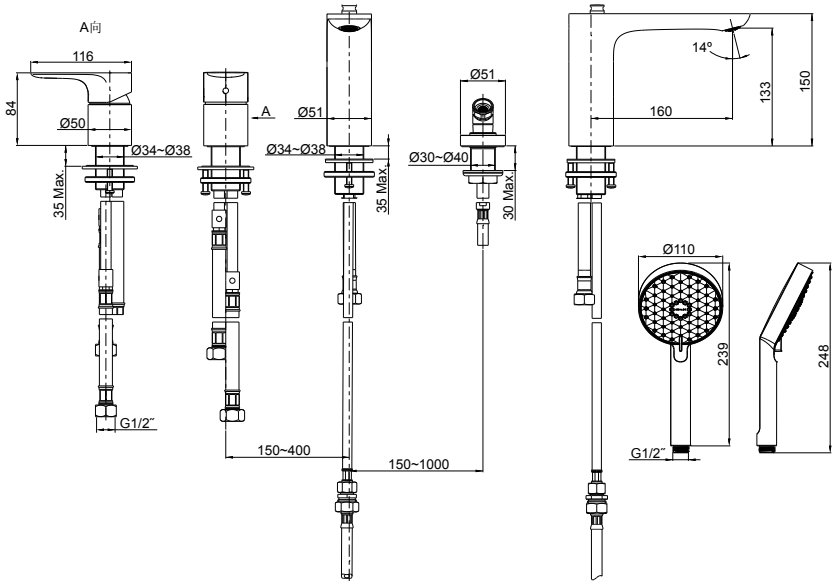




Kohler Co. reserves the right to make revisions without notice to product specifications.
For more information, please refer www.me.kohler.com or mail at contact.middleeast@kohler.com

KOHLER